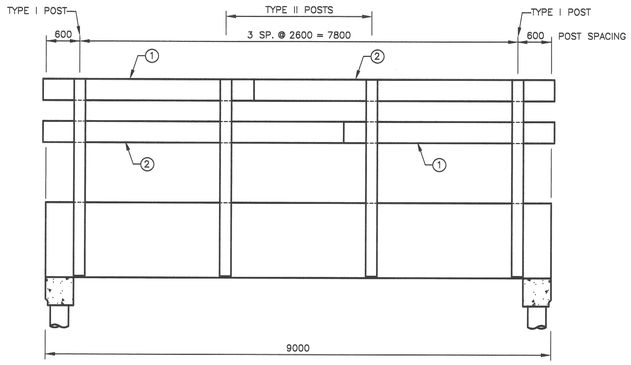

ELEVATION
SCALE 1:50 HORIZ

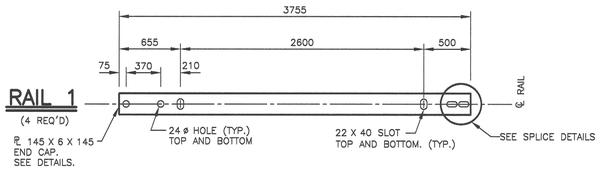

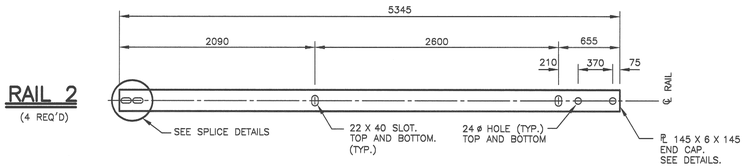

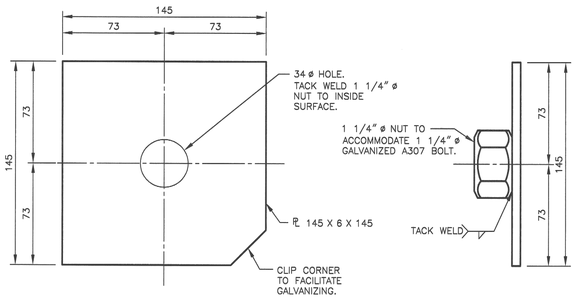

END CAP DETAILS
SCALE 1:2
(8 REQ'D)

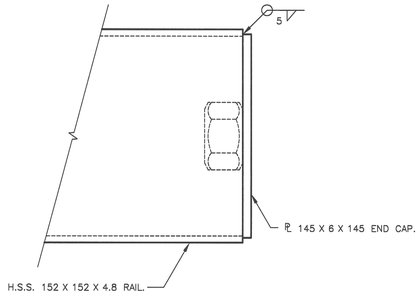

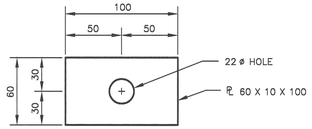

PLATE WASHER
SCALE 1:2.5
(32 REQ'D)

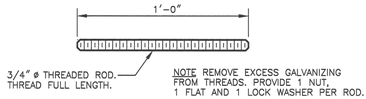

ANCHOR ROD DETAILS
SCALE 1:5
(32 REQ'D)

NOTES:

1. Design Specifications – CAN/CSA–S6–06
2. Performance Level PL–1
3. For use at locations with an approach guardrail.
4. Posts shall be perpendicular to the roadway profile in their erected position. Vertical alignment of rails shall be parallel to the roadway profile.
5. Structural steel, except tubing, shall conform to the requirements of CAN/CSA G40.21, Grade 300W.
6. The hollow structural sections shall conform to the requirements of CAN/CSA G40.21, Grade 350W.
7. All railing, posts, blocks and hardware shall be galvanized in accordance with the requirements of CSA Standard G164. The threads of all galvanized nuts shall be tapped oversize in accordance with ASTM Specification A563.
8. All welding shall conform to the requirements of CSA Standard W59.
9. All galvanized surfaces damaged during transport or welding shall receive a coat of zinc–rich paint.
10. All bolts shall conform to the requirements of ASTM Specification A307.
11. Bolt quantities shown include 5% extra to cover loss and wastage.
12. 3/4" ø threaded anchor rods shall conform to the requirements of ASTM Specification A193, Grade B7.
13. Nuts for anchor rods shall be heavy hex nuts conforming to the requirements of ASTM Specification A563, Grade DH.
14. The 150 X 3 X 150 shims shall be installed where necessary, between the HSS 152 X 152 X 4.8 rail and the post in order to ensure the rail bearing directly onto the post and a straight horizontal alignment of the rail. Tack weld shims to the post.
15. Anchor rod and bolt dimensions are in Imperial Units. All other dimensions are in millimetres.

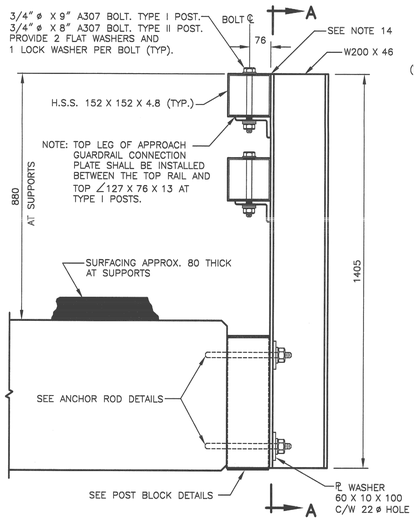

SIDE ELEVATION

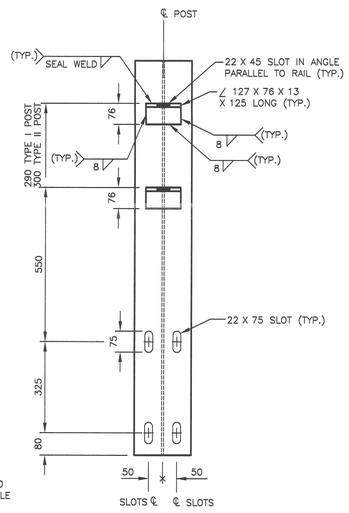

SECTION A–A

POST DETAILS
SCALE 1:10
(4 TYPE I REQ'D)
(4 TYPE II REQ'D)

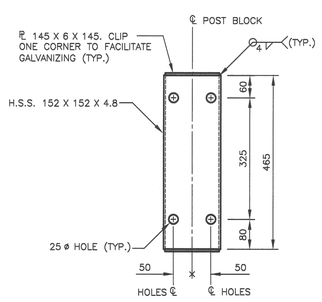

POST BLOCK DETAILS
SCALE 1:7.5
(8 REQ'D)

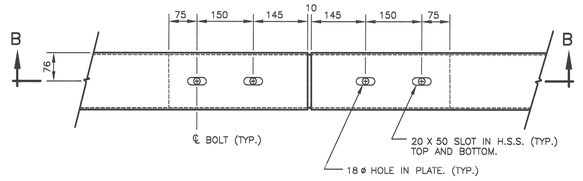

PLAN

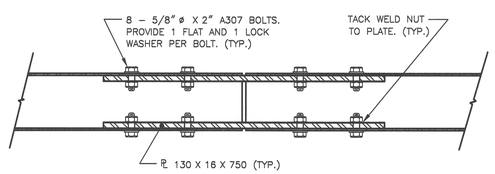

SECTION B–B

SPLICE DETAILS
SCALE 1:7.5
(8 SPLICE PLATES REQ'D)

QUANTITIES	
STRUCTURAL STEEL	1540 kg
5/8" ø X 2" A 307 BOLT	34
3/4" ø X 9" A 307 BOLT	9
3/4" ø X 8" A 307 BOLT	9
3/4" ø X 1'–0" ANCHOR RODS	32
SHIM ℄ 150 X 3 X 150	20
℄ 60 X 10 X 100 (PLATE WASHER)	32

NO.	DATE	DESCRIPTION
		REVISIONS
1	03-JUN-2013	UPDATE LOGO

Government of Saskatchewan
Ministry of Highways & Infrastructure

BRIDGE STANDARDS

TYPE 4 BRIDGERAIL

1–9 m SPAN

RECOMMENDED BY: SENIOR BRIDGE DESIGN ENGINEER — DATE 3-JUN-2013

APPROVED BY: DIRECTOR, BRIDGE STANDARDS — DATE 3-JUN-2013

DESIGN	DRAWN	CHECKED	FILE
G.L.	G.L.	A.H.	
DATE	DATE	DATE	PLAN
11–Jan–2012	11–Jan–2012	16–Nov–2012	BR402

Sheet 1 of 1

LAST REVISED DATE: 08–MAY–2013 4:45 PM